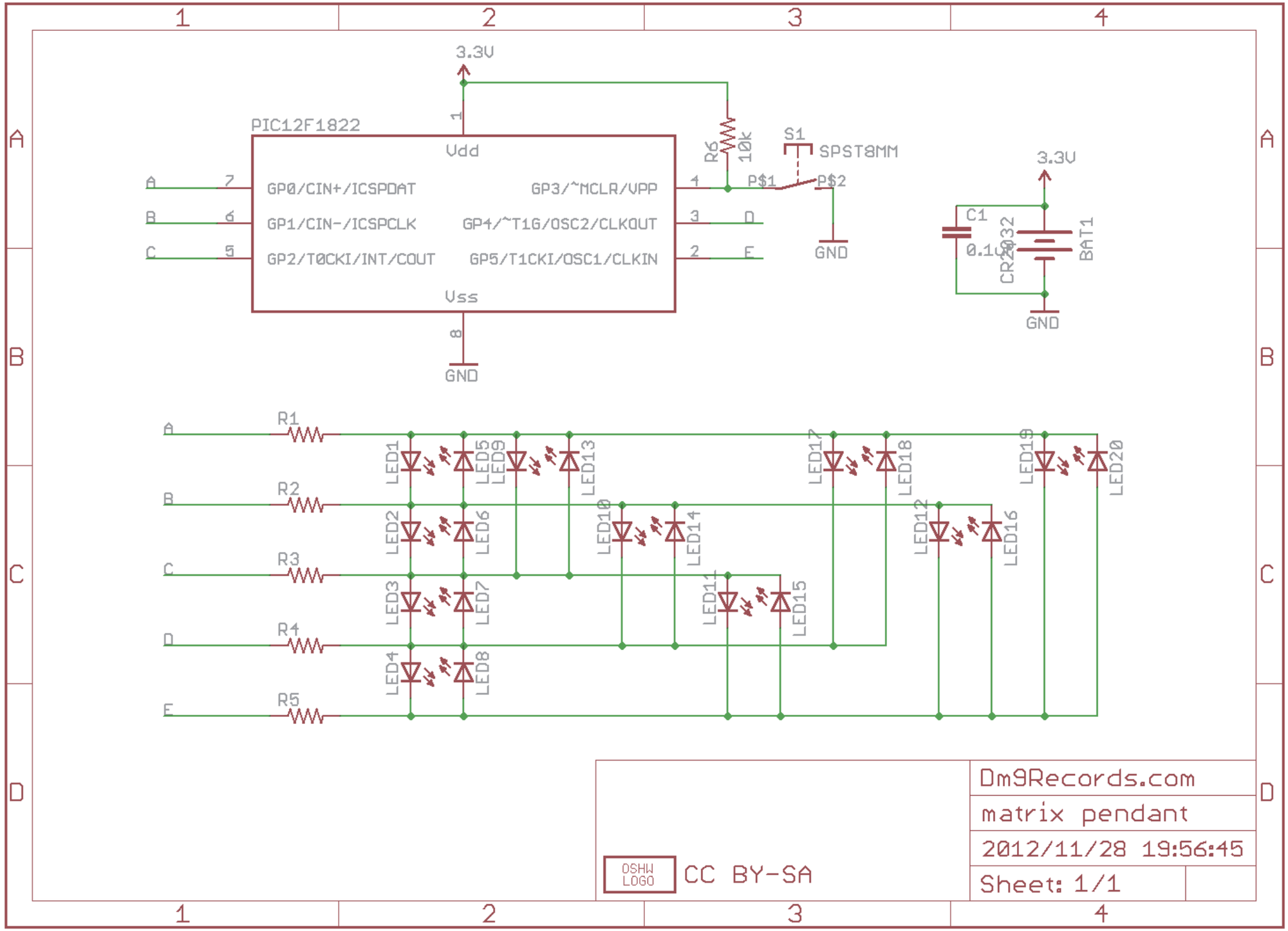
3.3V
PIC12F1822
Vdd
GP0/CIN+/ICSPDAT
GP1/CIN-/ICSPCLK
GP2/T0CKI/INT/COUT
GP3/~MCLR/VPP
GP4/~T1G/OSC2/CLKOUT
GP5/T1CKI/OSC1/CLKIN
Vss
GND
R6
10k
S1
SPST8MM
P$1
P$2
GND
3.3V
C1
0.1u
CR2032
BAT1
GND
R1
R2
R3
R4
R5
LED1
LED2
LED3
LED4
LED5
LED6
LED7
LED8
LED9
LED10
LED11
LED12
LED13
LED14
LED15
LED16
LED17
LED18
LED19
LED20
OSHW LOGO
CC BY-SA
Dm9Records.com
matrix pendant
2012/11/28 19:56:45
Sheet: 1/1